CONNECTION DIAGRAM

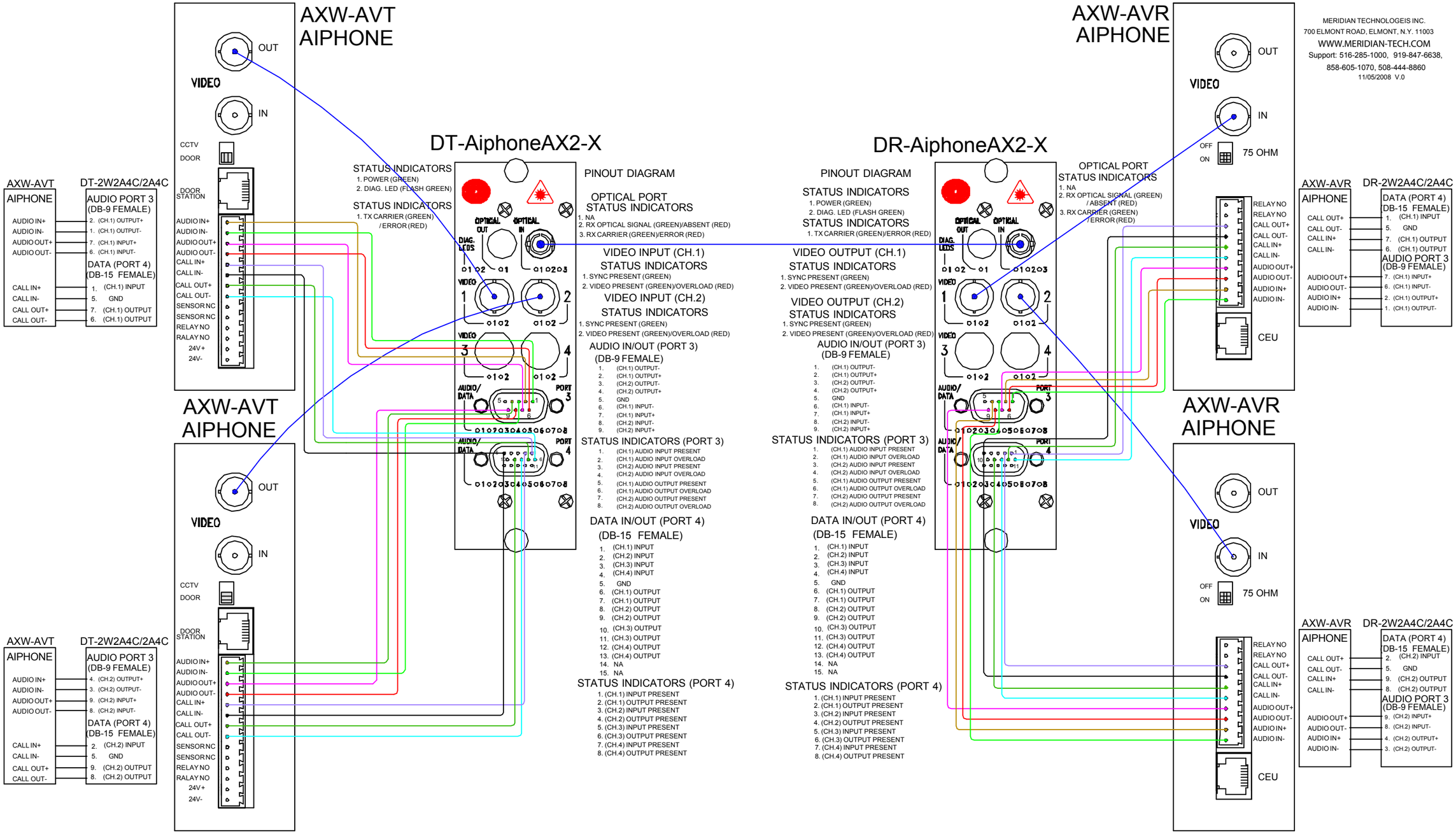

MERIDIAN TECHNOLOGEIS INC.
700 ELMONT ROAD, ELMONT, N.Y. 11003
WWW.MERIDIAN-TECH.COM
Support: 516-285-1000, 919-847-6638,
858-605-1070, 508-444-8860

11/05/2008 V.0

VER. 10/2025 B